REV.	DESCRIPTION	DATE	DRAWN	APPROVED
A1	DWG.REL	2016/10/7	FANG	YANG

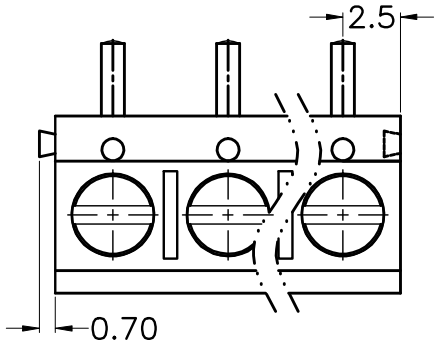

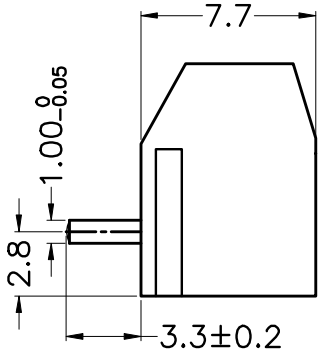

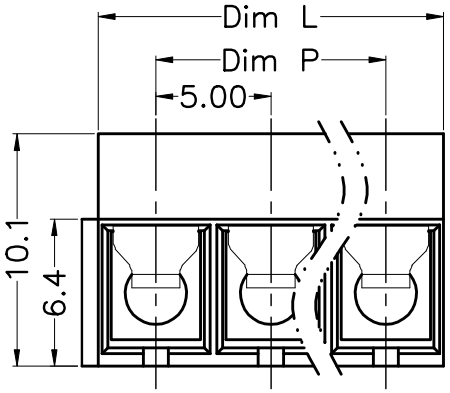

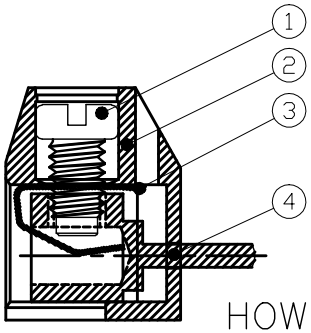

- Material
  - ①Screws : M2.5 steel, Zinc plated, "—" slot type
  - ②Housing : PA66, UL94V-0
  - ③Reed : Phosphor bronze,Ni plated or stainless steel
  - ④Pin header : Brass, Tin plated

- Electrical

	UL	IEC
Rated voltage :	300V	250V
Rated current :	12A	17.5A

Insulation resistance: 500MΩ/DC500V
Withstanding Voltage : AC2000V/1min
Wire range: 22-14AWG 2.5mm²

- Mechanical
  - Operating temperature:-30℃~+120℃
  - Soldering temperature:250℃±5/5sec
  - Torque: 0.4N.m (3.54Lb.in)
  - Strip length: 4.5-5mm

HOW TO ORDER

KF301 R -5.0-XXP-1 X-XXXXX

- KF301 → MODEL
- R → V: straight needle; R: bending needle
- 5.0 → Pitch:mm
- XXP → No.of poles: 2~24P
- 1 → 1:Single Pitch; 2:Double Pitch
- X → Color: G:Green, R:Red, K:Black, W:White, O:Orange, B:Blue, GR:Gray
- XXXXX → Customer Request

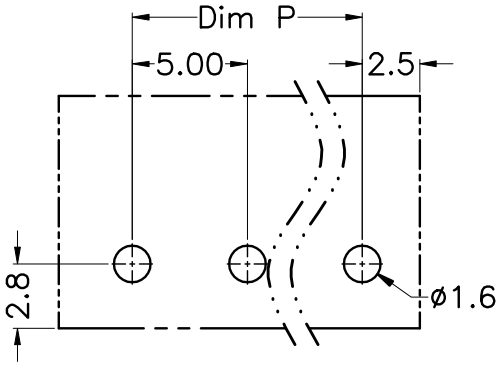

P.C.B.LAYUOT

N=Number of Poles
Dim P=(N-1)x5.00
Dim L=Nx5.00

Poles \ Dim	Dim P	Dim L
2-6P	±0.10	±0.15
7-12P	±0.20	±0.20
13-18P	±0.25	±0.30
19-24P	±0.30	±0.40

GENERAL TOLERANCE		ANGLE TOLERANCE	
X.	±0.5	X°.	±5°
.X	±0.3	.X°	±3°
.XX	±0.1	.XX°	±1°

DRAWING TYPE	CUSTOMER		
SCALE	1:1	SHEET	1 OF 1
DRAWING NO.	XP0012016-xxxx		

PROJECTION		TITLE	KF301R-5.0-XXP
UNITS	mm		
SHEET SIZE	A4	SERIES	KF301R

KAIFENG ELECTRONIC 慈溪市凯峰电子有限公司
CIXI KAIFENG ELECTRONIC CO.,LTD